RECOMMEND PCB PATTERN

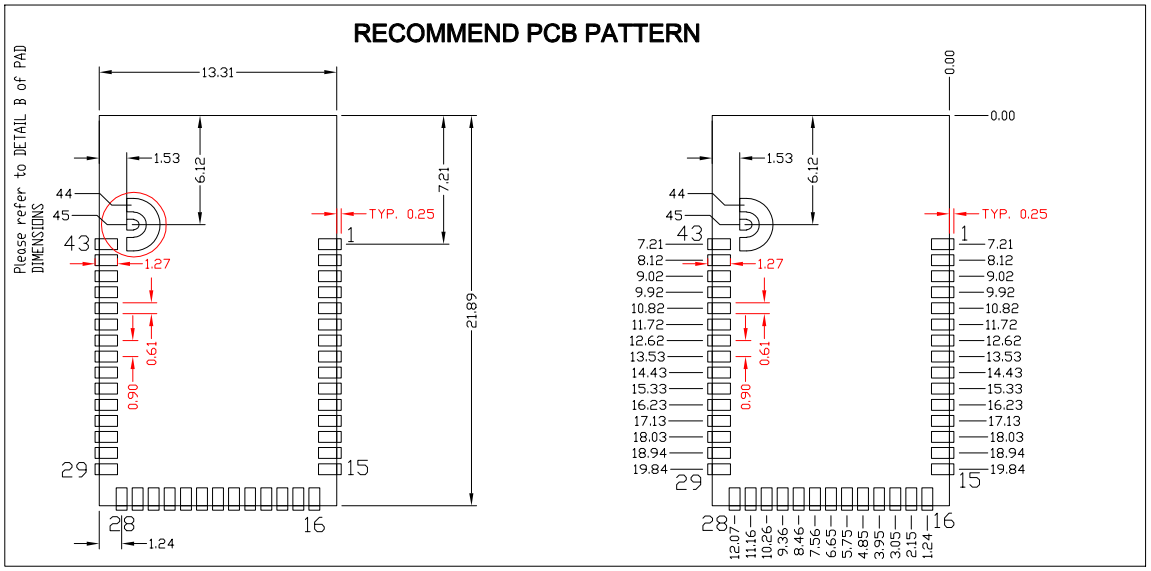

REVISIONS			
REV	DESCRIPTION	DATE	APPROVED
0.1	INITIAL RELEASE	WW2125	

MODULE PAD ASSIGNMENT:

PAD1:GND	PAD23:GND_A
PAD2:VDD	PAD24:MIC_AVDD
PAD3:XRES	PAD25:MIC_N
PAD4:P32	PAD26:MIC_P
PAD5:P27	PAD27:MIC_BIAS
PAD6:P26	PAD28:GND_A
PAD7:P38	PAD29:UART_CTS_N
PAD8:P34	PAD30:UART_RTS_N
PAD9:P1	PAD31:UART_TXD
PAD10:P0	PAD32:UART_RXD
PAD11:P29	PAD33:SPI_MISO
PAD12:P28	PAD34:P2
PAD13:P13	PAD35:P3
PAD14:P12	PAD36:HOST_WAKE
PAD15:P11	PAD37:P4
PAD16:P10	PAD38:P5
PAD17:P9	PAD39:P6
PAD18:P16	PAD40:P7
PAD19:GND	PAD41:P8
PAD20:P15/XTALI_32K	PAD42:P14
PAD21:XTALO_32K	PAD43:GND
PAD22:GND	PAD44:GND-for 333073 only
	PAD45:ANT-for 333073 only

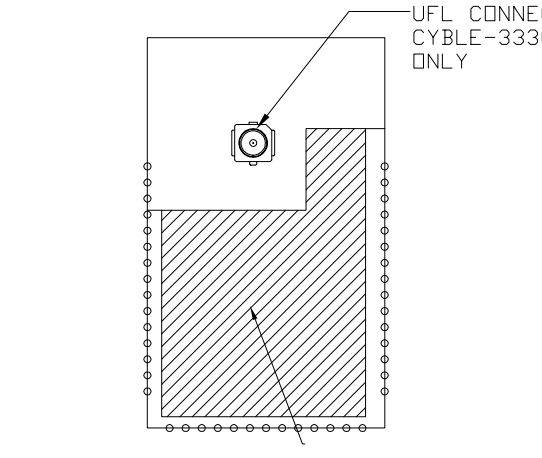

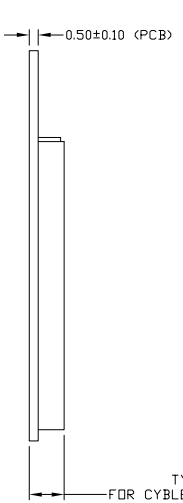

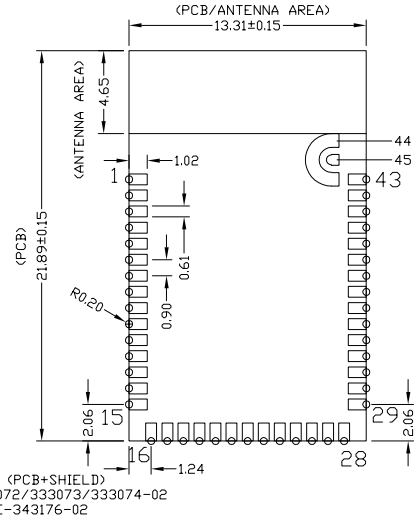

SEEN FROM TOP **SEEN FROM SIDE** **SEEN FROM BOTTOM**



SCALE 1:1

UNLESS OTHERWISE SPECIFIED	SIGNATURES	DATE
DIMENSIONS ARE IN MM	DRAWN:	WW2125
TOLERANCES ON: +/- 0.15 MM	CHECKED	
	ENGRG	
ANGLES +/-0.5 DEGREE	ISSUED	

CYPRESS SEMICONDUCTOR Corp.

CYBLE-343072/333073/333074-02
CYBLE-343176-02

SIZE	REV NO	DWG NO
	0.1	

SCALE 5:1 | THE 3RD PROJECTION | SHEET: 1 OF 1

HOST PCB KEEP OUT AREA AROUND ANTENNA

1. FOR BEST RF PERFORMANCE,ADDITIONAL KEEPOUT IN BLUE HATCHED AREA ON THE HOST BOARD ON ALL LAYERS.
2. RECOMMENDATION IS TO PLACE THE BLE MODULE IN THE CORNER OF THE HOST BOARD.
3. FOR CYBLE-343072/343176-02 ONLY

ANTENNA KEEP-OUT AREA ONLY BARE PCB/SUBSTRATE

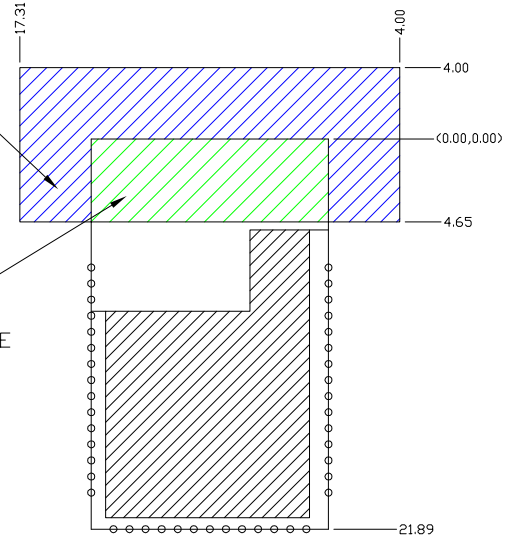

PAD DIMENSION

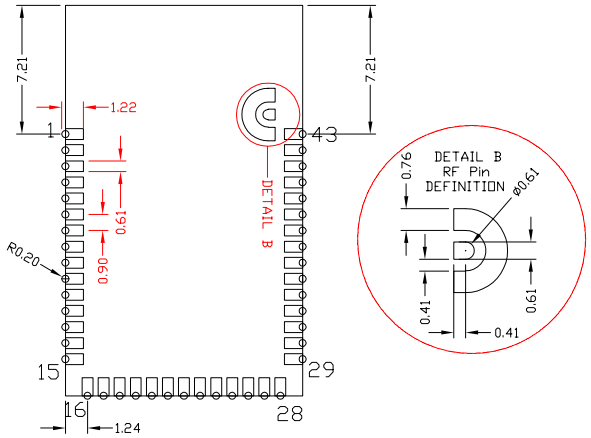

SOLDER PAD AND LOCATION

Solder Pad (Center of Pad)	Location (X,Y) from Origin (mm)	Dimension from Origin (mil)
1	(0.38, 7.21)	(14.96, 283.86)
2	(0.38, 8.12)	(14.96, 319.68)
3	(0.38, 9.02)	(14.96, 355.12)
4	(0.38, 9.92)	(14.96, 390.55)
5	(0.38, 10.82)	(14.96, 425.98)
6	(0.38, 11.72)	(14.96, 461.42)
7	(0.38, 12.62)	(14.96, 496.85)
8	(0.38, 13.53)	(14.96, 532.68)
9	(0.38, 14.43)	(14.96, 568.11)
10	(0.38, 15.33)	(14.96, 603.54)
11	(0.38, 16.23)	(14.96, 638.98)
12	(0.38, 17.13)	(14.96, 674.41)
13	(0.38, 18.03)	(14.96, 709.84)
14	(0.38, 18.94)	(14.96, 745.67)
15	(0.38, 19.84)	(14.96, 781.10)
16	(1.24, 21.51)	(48.82, 846.85)
17	(2.15, 21.51)	(84.65, 846.85)
18	(3.05, 21.51)	(120.08, 846.85)
19	(3.95, 21.51)	(155.51, 846.85)
20	(4.85, 21.51)	(190.94, 846.85)
21	(5.75, 21.51)	(226.38, 846.85)
22	(6.65, 21.51)	(261.81, 846.85)
23	(7.56, 21.51)	(297.64, 846.85)
24	(8.46, 21.51)	(333.07, 846.85)
25	(9.36, 21.51)	(368.50, 846.85)
26	(10.26, 21.51)	(403.94, 846.85)
27	(11.16, 21.51)	(439.37, 846.85)
28	(12.07, 21.51)	(475.20, 846.85)
29	(12.93, 19.84)	(509.05, 781.10)
30	(12.93, 18.94)	(509.05, 745.67)
31	(12.93, 18.03)	(509.05, 709.84)
32	(12.93, 17.13)	(509.05, 674.41)
33	(12.93, 16.23)	(509.05, 638.98)
34	(12.93, 15.33)	(509.05, 603.54)
35	(12.93, 14.43)	(509.05, 568.11)
36	(12.93, 13.53)	(509.05, 532.68)
37	(12.93, 12.62)	(509.05, 496.85)
38	(12.93, 11.72)	(509.05, 461.42)
39	(12.93, 10.82)	(509.05, 425.98)
40	(12.93, 9.92)	(509.05, 390.55)
41	(12.93, 9.02)	(509.05, 355.12)
42	(12.93, 8.12)	(509.05, 319.68)
43	(12.93, 7.21)	(509.05, 283.86)

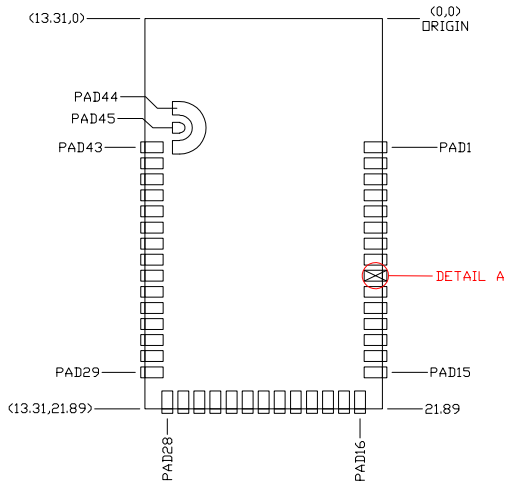

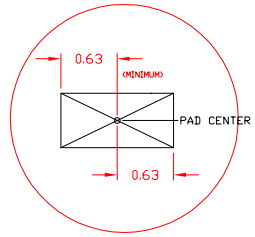

UNLESS OTHERWISE SPECIFIED	SIGNATURES	DATE
DIMENSIONS ARE IN MM	DRAWN:	WW2125
TOLERANCES ON:	CHECKED	
+/- 0.20 MM	ENGRG	
ANGLES +/-0.5 DEGREE	ISSUED	

CYPRESS SEMICONDUCTOR Corp.

CYBLE-343072/333073/333074-02
CYBLE-343176-02

SIZE	REV NO	DWG NO
	0.1	

SCALE 5:1 | THE 3RD PROJECTION | SHEET: 2 OF 2